Automatic transmission, 5-speed automatic with tiptronic

⇒ 4.0L - Engine - Motronic Multiport Fuel Injection (MFI)/202kW, code BDP
From January 2002

Notes:

- *Information for*
- *Relay and fuse arrangements*
- *Connector arrangements*
- *Control Modules and Relays*
- *Ground connections*
- *⇒ Component Locations!*
- *Information for*
- *Troubleshooting Procedures*
- *⇒ Guided Fault Finding using VAS 5051/5052*

Edition 12.03

Protected by copyright. Copying for private or commercial purposes, in part or in whole, is not permitted unless authorised by Volkswagen AG. Volkswagen AG does not guarantee or accept any liability with respect to the correctness of information in this document. Copyright by Volkswagen AG.

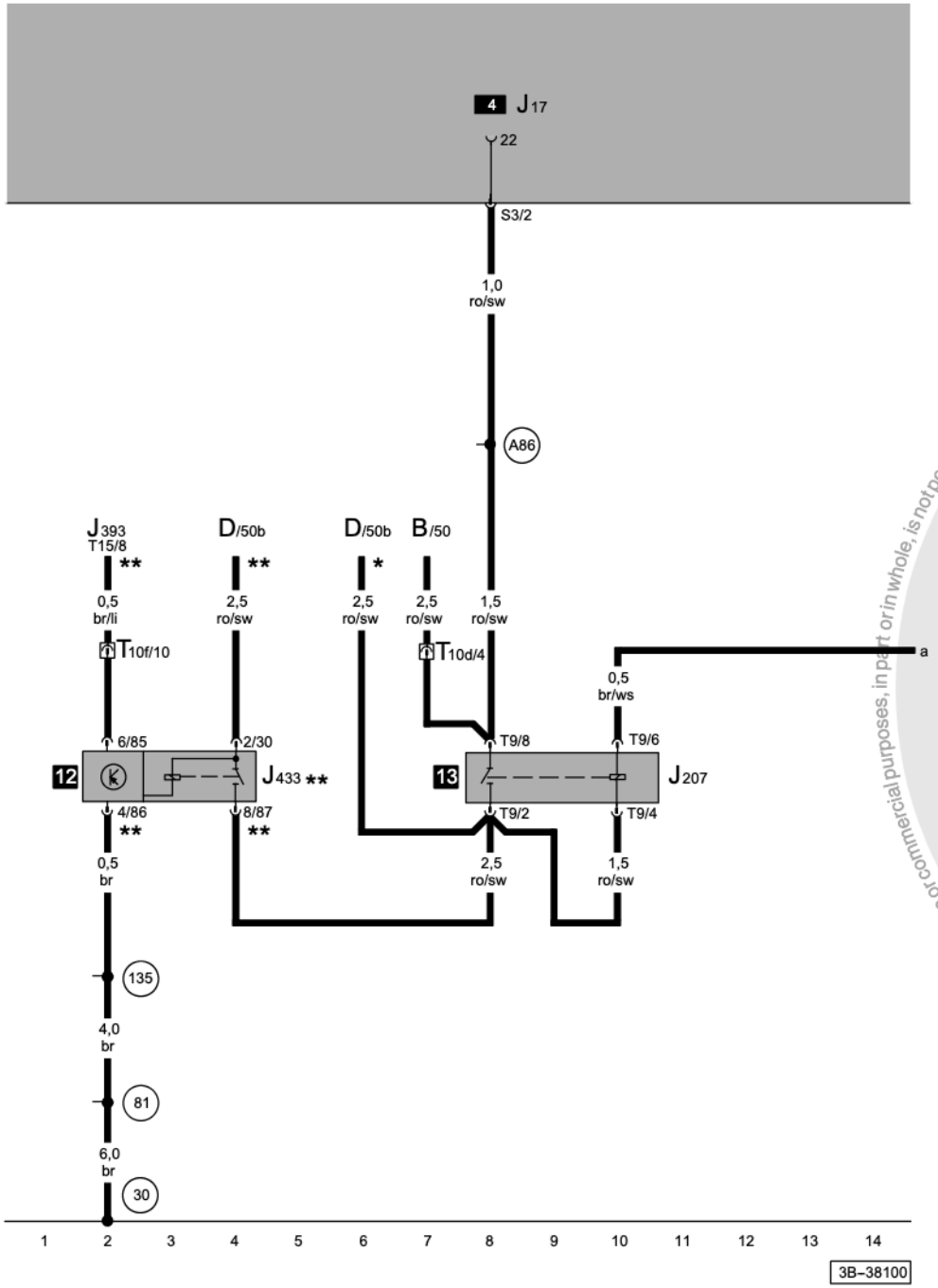

Starting Interlock Relay, Locking relay for starter (anti-theft immobilizer)

Edition12
.03

B	Starter
D	Ignition/Starter Switch
J17	Fuel Pump (FP) Relay
J207	Starting Interlock Relay
J393	Central control module for comfort system
J433	Locking relay for starter (anti-theft immobilizer) **
T9	9-Pin Connector, on Starting Interlock Relay
T10d	10-Pin Connector, brown, on protective housing for control module, in engine compartment, left
T10f	10-Pin Connector, blue, connector station A-pillar, left
T15	15-Pin Connector, on Central control module for comfort system
30	Ground connection, -1-, beside fuse/relay panel
81	Ground connection -1-, in instrument panel wiring harness
135	Ground connection -2-, in instrument panel wiring harness
A86	Connection (50a), in instrument panel wiring harness
*	from May 2003
**	through April 2003

ws	=	white
sw	=	black
ro	=	red
br	=	brown
gn	=	green
bl	=	blue
gr	=	grey
li	=	lilac
ge	=	yellow
or	=	orange
rs	=	pink

Protected by copyright. Copying for private or commercial purposes, in part or in whole, is not permitted unless authorised by Volkswagen AG. Volkswagen AG does not give a guarantee or accept any liability with respect to the correctness of information in this document. Copyright by Volkswagen AG.

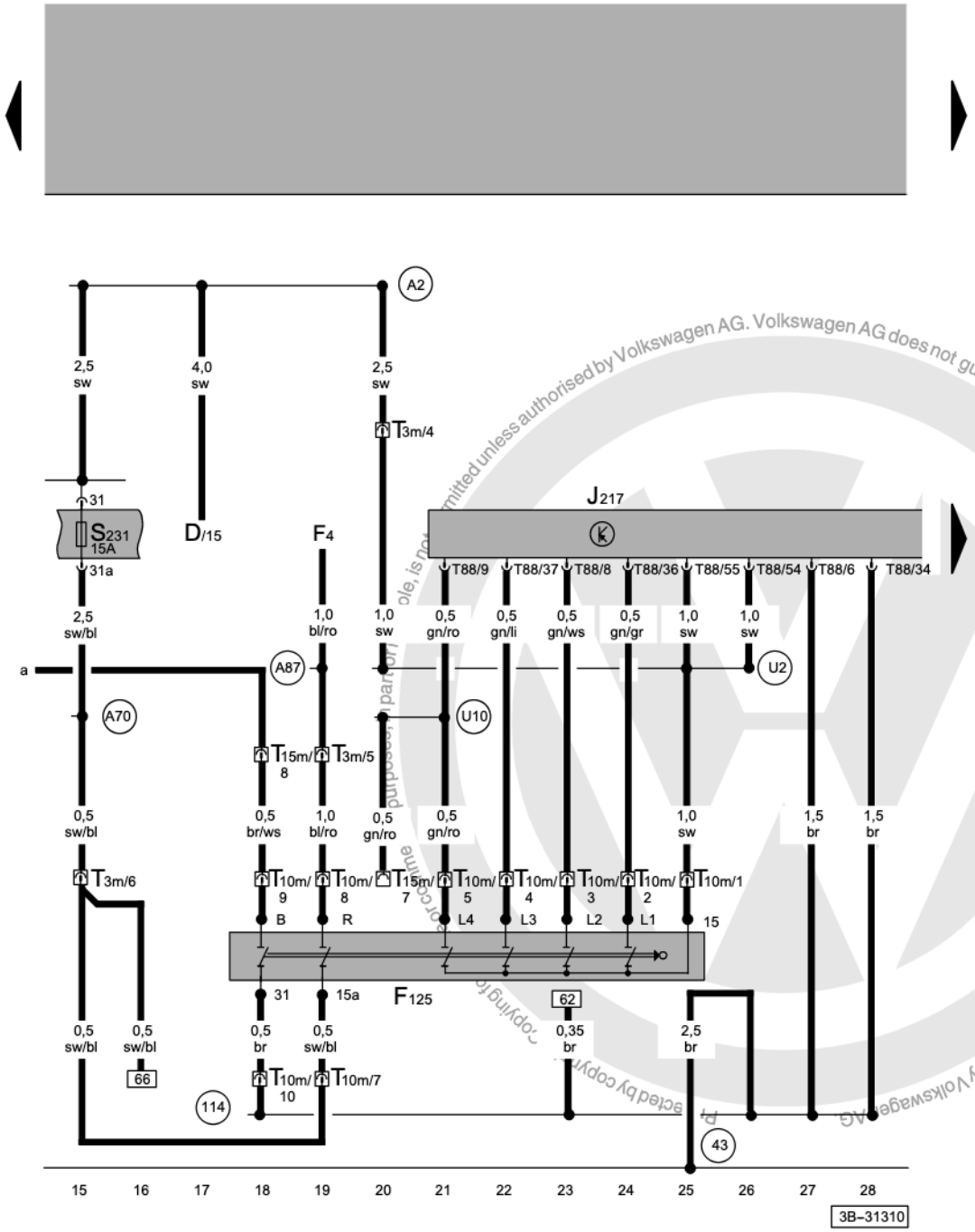

ws = white
sw = black
ro = red
br = brown
gn = green
bl = blue
gr = grey
li = lilac
ge = yellow
or = orange
rs = pink

Multi-Function Transmission Range (TR) Switch, Transmission Control Module (TCM)

Edition12
.03

D	Ignition/Starter Switch
F4	Back-Up Light Switch
F125	Multi-Function Transmission Range (TR) Switch
J217	Transmission Control Module (TCM)
S231	Fuse in fuse holder
T3m	3-Pin connector, brown, connector station A-pillar, right
T10m	10-Pin connector
T15m	15-Pin connector, brown, connector station A-pillar, right
T88	88-Pin connector, on transmission control Module (TCM)
43	Ground connection, on right A-pillar, lower part
114	Ground connection, in automatic transmission wiring harness
A2	plus connection (15), in instrument panel wiring harness
A70	Connector (15a, fuse 231), in instrument panel wiring harness
A87	Connector (reverse lamp), in instrument panel wiring harness
U2	wire connection -1- (15), in automatic transmission wiring harness
U10	Cruise Control Connection (in automatic transmission wiring harness)

Protected by copyright. Copying for commercial purposes, or publishing in other media, is not permitted unless authorised by Volkswagen AG. Volkswagen AG does not guarantee or accept any liability with respect to the correctness of information in this document. Copyright by Volkswagen AG

Transmission Control Module (TCM), Transmission Fluid Temperature Sensor, Solenoid Valve 1-3, Pressure Control Valve 1-4, Vehicle Speed Sensor (VSS)

Edition12
.03

G68	Vehicle Speed Sensor (VSS)
G93	Transmission Fluid Temperature Sensor
J217	Transmission Control Module (TCM)
N88	Solenoid Valve 1
N89	Solenoid Valve 2
N90	Solenoid Valve 3
N215	Pressure Control Valve 1 for Auto. Transmission
N216	Pressure Control Valve 2 for Auto. Transmission
N217	Pressure Control Valve 3 for Auto. Transmission
N218	Pressure Control Valve 4 for Auto. Transmission
T16a	16-Pin connector, on transmission
T88	88-Pin connector, on transmission control Module (TCM)

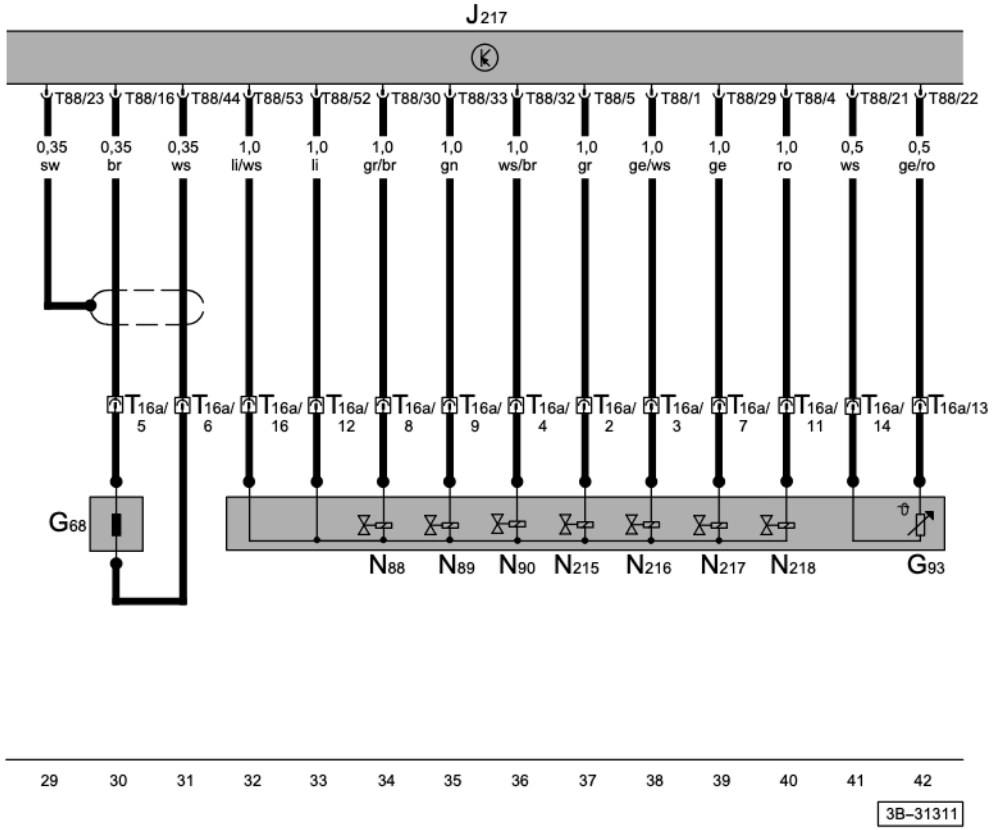

ws	=	white
sw	=	black
ro	=	red
br	=	brown
gn	=	green
bl	=	blue
gr	=	grey
li	=	lilac
ge	=	yellow
or	=	orange
rs	=	pink

Protected by copyright. Copying for private or commercial purposes, in part or in whole, is not permitted unless authorised by Volkswagen AG. Volkswagen AG does not guarantee or accept any liability with respect to the correctness of information in this document. Copyright by Volkswagen AG.

Transmission Control Module (TCM), Transmission Vehicle Speed Sensor (VSS), below instrument panel

Edition12
.03

G38	Transmission Vehicle Speed Sensor (VSS)
J217	Transmission Control Module (TCM)
J220	Motronic Engine Control Module (ECM)
J285	Control module with indicator unit in instrument panel insert
S15	Fuse
T15m	15-Pin connector, brown, connector station A-pillar, right
T15s	15-Pin connector
T16	16-Pin connector, black, Data Link Connector (DLC), below instrument panel, left
T16a	16-Pin connector, on transmission
T32a	32-Pin connector, blue, on instrument cluster
T32b	32-Pin connector, green, on instrument cluster
T88	88-Pin connector, on transmission control Module (TCM)
500	Threaded connection -1- (30) on the relay plate
A1	plus connection (30a), in instrument panel wiring harness
A32	plus connection (30), in instrument panel wiring harness
A76	Connector (K-diagnosis wire) in instrument panel wiring harness
A121	Connection (high bus) in instrument panel wiring harness
A122	Connection (low bus) in instrument panel wiring harness
*	through April 2003

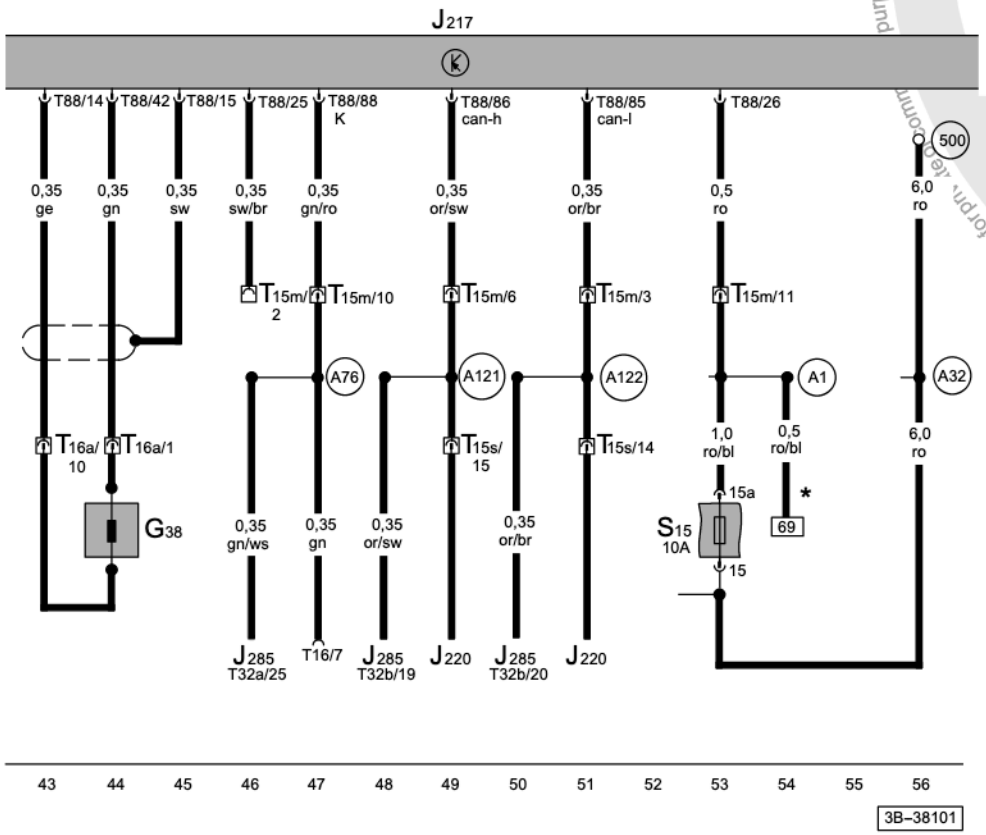

ws	=	white
sw	=	black
ro	=	red
br	=	brown
gn	=	green
bl	=	blue
gr	=	grey
li	=	lilac
ge	=	yellow
or	=	orange
rs	=	pink

Protected by copyright. Copying for pr. aes. comm. purposes, in part or in whole, is not permitted unless authorised by Volkswagen AG. Volkswagen AG does not guarantee or accept any liability with respect to the correctness of information in this document. Copyright by Volkswagen AG.

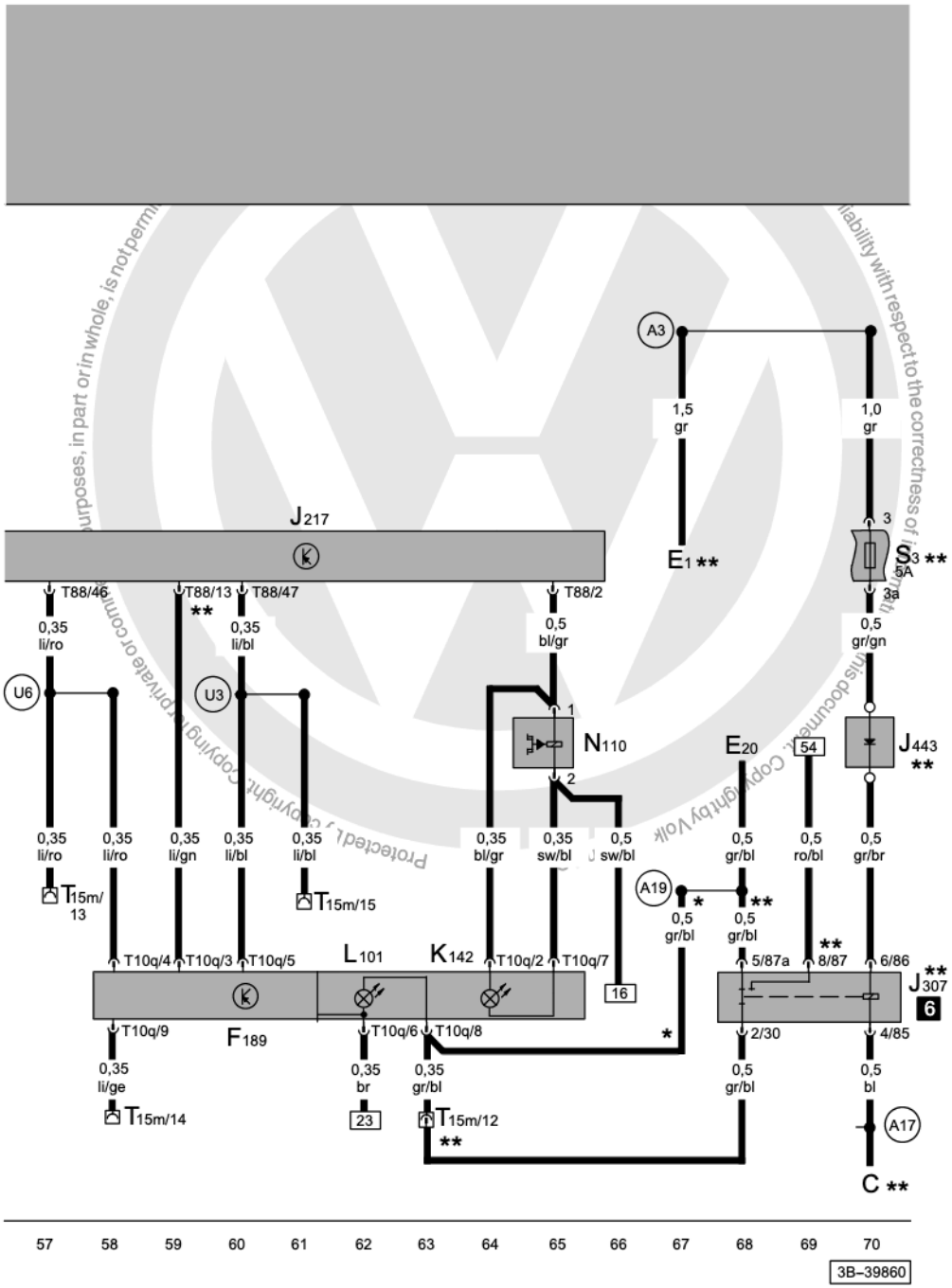

Transmission Control Module (TCM), Selector Lever Light Relay, Tiptronic Switch, Warning light for selector lever position P/N

Edition04
.04

C	Generator (GEN)
E1	Light switch
E20	Instrument Panel Light Dimmer Switch
F189	Tiptronic Switch
J217	Transmission Control Module (TCM)
J307	Selector Lever Light Relay
J443	Locking diode for selector lever illumination
K142	Warning light for selector lever position P/N
L101	Illumination for selector lever scale
N110	Shift Lock Solenoid
S3	Fuse
T10q	10-Pin connector
T15m	15-Pin connector, brown, connector station A-pillar, right
T88	88-Pin connector, on transmission control Module (TCM)
A3	plus connection (58), in instrument panel wiring harness
A17	wire connection (61), in instrument panel wiring harness
A19	wire connection (58d), in instrument panel wiring harness
U3	wire connection -1-, in automatic transmission wiring harness
U6	Wire connection -2-, in automatic transmission wiring harness
*	from May 2003
**	through April 2003

ws	=	white
sw	=	black
ro	=	red
br	=	brown
gn	=	green
bl	=	blue
gr	=	grey
li	=	lilac
ge	=	yellow
or	=	orange
rs	=	pink

Protected / copyright. Copyright by Volk... This document ... liability with respect to the correctness of ... purposes, in part or in whole, is not perm...